TERRASAN AWWTP--SIMPLIFIED FLOW DIAGRAM

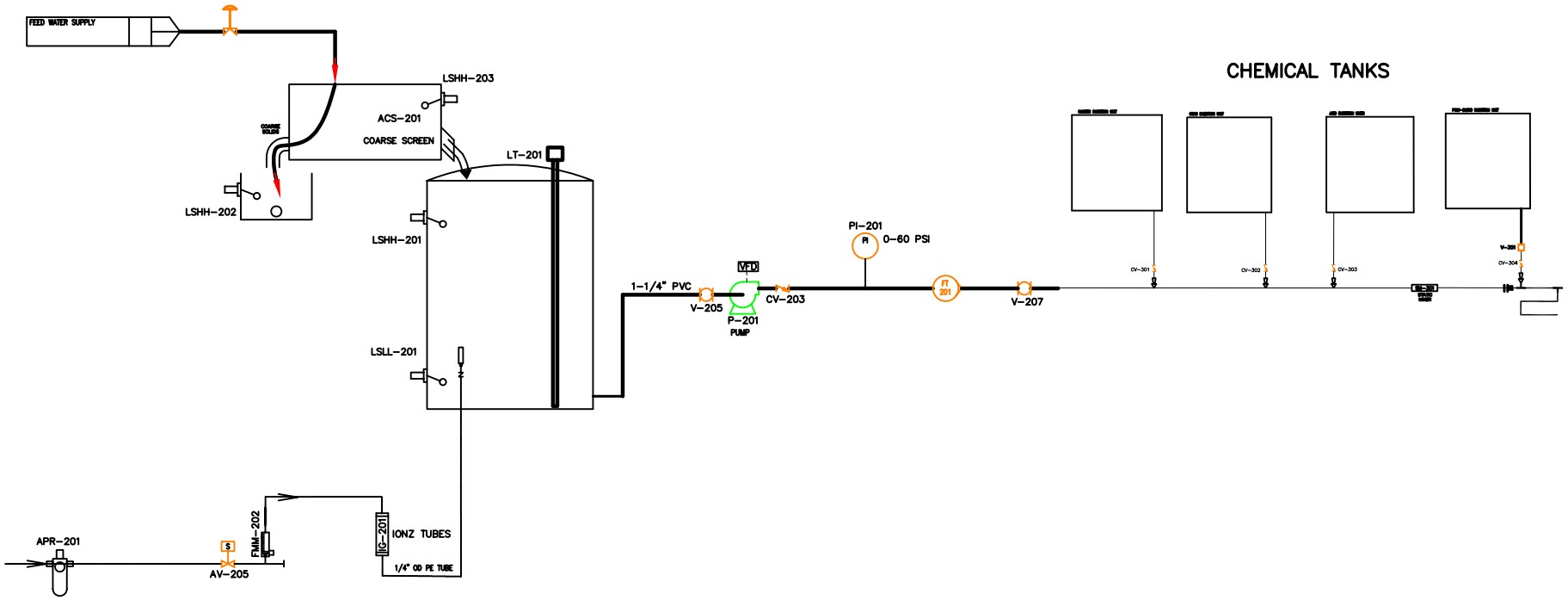

STD: BORDER-0108-24X36D1

INTL REF:

BAR = 1" AT PLOT SCALE

COMPANY CONFIDENTIAL
THIS DOCUMENT AND ALL INFORMATION CONTAINED HERE ARE THE PROPERTY OF IONZ BLUEWATER SOLUTIONS, INC. AND ARE PROPRIETARY TO IONZ BLUEWATER SOLUTIONS, INC. THEY ARE NOT TRANSFERABLE, NOT TO BE DISCLOSED TO ANY OTHER PARTY, NOT TO BE USED FOR THE PURPOSE OF ANY OTHER PROJECT, OR COMPANY, IN WHOLE OR IN PART, WITHOUT THE EXPRESS WRITTEN CONSENT OF IONZ BLUEWATER SOLUTIONS, INC. THE RECEIPT OF THIS DOCUMENT BY ANY PERSON OR COMPANY OTHER THAN IONZ BLUEWATER SOLUTIONS, INC. CONSTITUTES AGREEMENT TO THESE TERMS AND CONDITIONS.

DESIGNER	DATE	
ERIS		
CHECKER	DATE	
ENGINEER	DATE	
MANAGER	DATE	
FILE:		
SCALE: NTS		

TITLE: SIMPLIFIED FLOW DIAGRAM
PRETREATMENT MODULES
Proprietary Information

CLIENT

IONZ BlueWater
IONZ Bluewater Solutions, Inc.
PO Box 39816, Fort Lauderdale, FL 33339
Phone: 561-843-6029

PROJECT	CODE	DRAWING	SHEET	REV
			1 OF 2	A
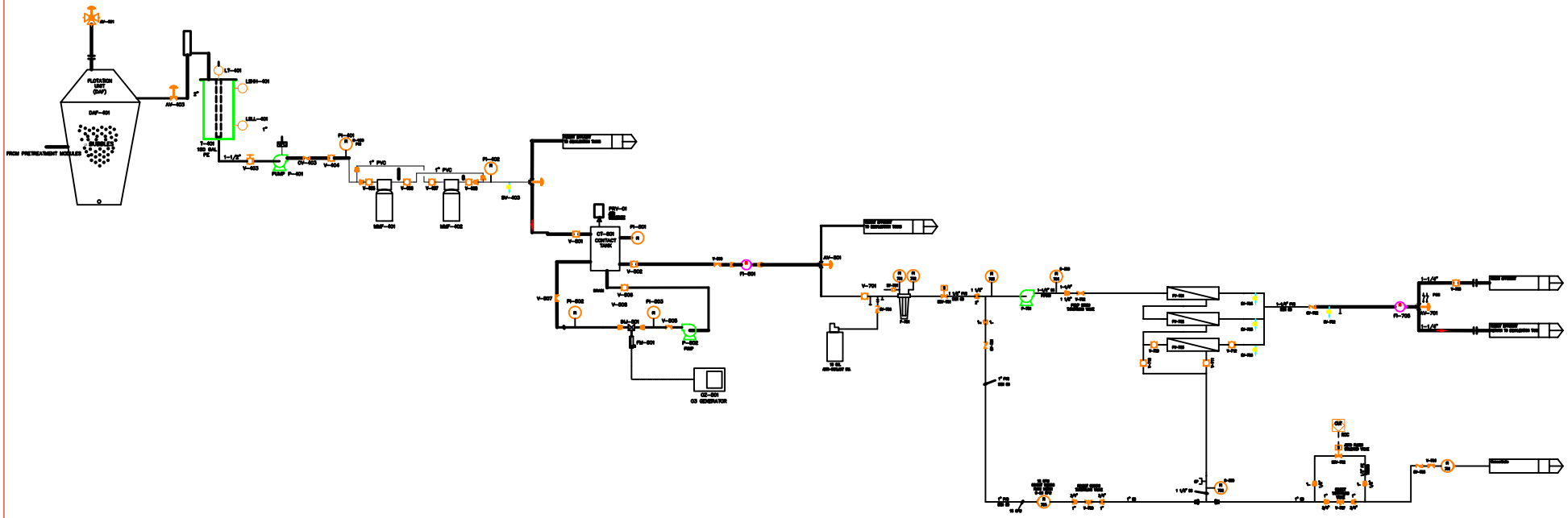
TERRASAN AWWTP--SIMPLIFIED FLOW DIAGRAM